AQUEOUS

KITCHEN ▪ LAVATORY ▪ BAR & UTILITY ▪ BATH ACCESSORIES

Homewerks Worldwide™
MAKING HOMES WORK. INSIDE AND OUT.

KITCHEN

Basic Series..... 4 - 5
Pull-Down Series..... 6 - 7
Hi-Rise Spout Series..... 8
Soap Dispensers..... 8
Pull-Out Series..... 9

LAVATORY

Basic Series..... 11 - 13
Traditional Series..... 13 - 15
Teapot Series..... 16
“J” Spout Series..... 17 - 18
Scroll Series..... 19
Victorian Series..... 20
Tub & Shower Components..... 21 - 27

MULTI-PURPOSE

Basic Series..... 27 - 28

BATH ACCESSORIES

Basic Series..... 29
Traditional Series..... 29
Victorian Series..... 30
Scroll Series..... 30

TOSCA

Kitchen faucets..... 32 - 33
Tub & Shower Components..... 35 - 38

HOMEWERKS

Utility Faucets..... 40 - 43

LIMITED 5-YEAR WARRANTY

HOMEWERKS WORLDWIDE, LLC warrants to the original consumer purchaser this product to be free from defects in material and workmanship under normal use in residential applications. At its option, the Company will provide repair parts or replace defective product when the product is used in accordance with the manufacturer’s specifications.

The Company provides a **Limited 5-Year Warranty** on the finish of this product to the original purchaser. At its option, the Company will provide repair parts or replace defective product when the product is used in accordance with the manufacturer’s specifications. Use of mild abrasive, abrasive or chemical cleaners may damage the finish of the faucet. We recommend cleaning your faucet with a soft cloth, moistened with water. Damage resulting from the use of abrasive or chemical cleaners **SHALL VOID THIS WARRANTY.**

This warranty is not applicable to any products or parts of products where damage is caused by use of non-genuine HOMEWERKS WORLDWIDE, LLC parts; is due to installation error, product misuse, negligence or faulty maintenance; or where the product is not installed according to local building codes.

This warranty excludes labor charges or damage incurred during installation, repair or replacement, and any indirect, incidental or consequential damages, losses, injury or costs of any nature. This warranty is in lieu of and excludes all other warranties, conditions and guarantees, whether expressed or implied, including without restriction those of merchantability or fitness of use.

Liability under this warranty will not exceed the purchase price for the product claimed to be defective by the original consumer purchaser. Some states or provinces do not allow the exclusion or limitation of consequential damages so the above limitations or exclusions may not apply. This warranty gives you specific legal rights and you may also have other rights which vary from state to state, or province to province.

Inquiries regarding warranty claims can be directed to HOMEWERKS WORLDWIDE, LLC via phone to (877) 319-3757 or by email to info@homewerksww.com.

AQUEOUS™

KITCHEN FAUCETS

10-K82-W — TWO HANDLE – BASIC SERIES

HW Part Number	Description	Cartridge	Case Qty.
10-K82-WNCH-AD-Z	Chrome less side-spray	Washerless	6
10-K82-WYCH-AD-Z	Chrome w/matching side-spray	Washerless	6

GENERAL FEATURES

- Quarter-turn washerless cartridge
- 8" center distance
- Acrylic handles
- Meets ANSI/NSF 61-9
- ASME A112.18.1/CSA B125 certified
- Complies with .25% weighted average lead content on wetted surfaces

CERTIFICATIONS

CH

20-K82-C — TWO HANDLE – BASIC SERIES

HW Part Number	Description	Cartridge	Case Qty.
20-K82-CNCH-AD-Z	Chrome less side-spray	Washerless	3
20-K82-CYCH-AD-Z	Chrome w/matching side-spray	Washerless	3

GENERAL FEATURES

- Quarter-turn washerless cartridge
- 8" center distance
- Metal lever handles
- Meets ANSI/NSF 61-9
- ASME A112.18.1/CSA B125 certified
- Complies with .25% weighted average lead content on wetted surfaces

CERTIFICATIONS

CH

30-K81-W — SINGLE HANDLE – BASIC SERIES

HW Part Number	Description	Cartridge	Case Qty.
30-K81-WNCH-AD-Z	Chrome less side-spray	Washerless	6
30-K81-WYCH-AD-Z	Chrome w/matching side-spray	Washerless	6
30-K81-WNBN-AD-Z	PVD brushed nickel less side-spray	Washerless	6
30-K81-WYBN-AD-Z	PVD brushed nickel w/matching side-spray	Washerless	6
30-K81-WYSLCH-AD-Z	Chrome w/matching side-spray and 20" x 3/8"compression braided supply lines installed	Washerless	6

GENERAL FEATURES

- Stainless steel ball washerless design
- 8" center distance
- Metal lever handle
- Meets ANSI/NSF 61-9
- ASME A112.18.1/CSA B125 certified
- Complies with .25% weighted average lead content on wetted surfaces

CERTIFICATIONS

CH BN

30-K81-W — SINGLE HANDLE – BASIC SERIES

HW Part Number	Description	Cartridge	Case Qty.
30-K81-WDCH-AD-Z	Chrome w/matching deck-mounted spray	Washerless	6

GENERAL FEATURES

- Stainless steel ball washerless design
- 8" center distance
- Metal lever handle
- Meets ANSI/NSF 61-9
- ASME A112.18.1/CSA B125 certified
- Complies with .25% weighted average lead content on wetted surfaces

CERTIFICATIONS

CH

30-K81-W — SINGLE HANDLE – BASIC SERIES

HW Part Number	Description	Cartridge	Case Qty.
30-K81-WNRNDCH-AD-Z	Chrome less side-spray	Washerless	6
30-K81-WYRNDCH-AD-Z	Chrome w/black side-spray	Washerless	6

GENERAL FEATURES

- Stainless steel ball washerless design
- 8" center distance
- Metal lever handle
- Meets ANSI/NSF 61-9
- ASME A112.18.1/CSA B125 certified
- Complies with .25% weighted average lead content on wetted surfaces

CERTIFICATIONS

CH

260-K81-CY — SINGLE HANDLE – BASIC SERIES

HW Part Number	Description	Cartridge	Case Qty.
260-K81-CYCH-AD-Z	Chrome w/side-spray	Ceramic	3
260-K81-CYBN-AD-Z	PVD brushed nickel w/side-spray	Ceramic	3

GENERAL FEATURES

- 8" center distance
- 3-hole installation
- Matching side-spray
- Metal lever handle
- Meets ANSI/NSF 61-9
- ASME A112.18.1/CSA B125 certified
- Complies with .25% weighted average lead content on wetted surfaces

CERTIFICATIONS

CH BN

50-K8-DC — SINGLE HANDLE – PULL-DOWN SERIES

HW Part Number	Description	Cartridge	Case Qty.
50-K8-DCCH-AD-Z	Chrome	Ceramic	3
50-K8-DCBN-AD-Z	PVD brushed nickel	Ceramic	3
50-K8-DCBB-AD-Z	Brushed bronze	Ceramic	3

CERTIFICATIONS

CH BN BB

GENERAL FEATURES

- Pull-down 2-function spray head
- 8" center distance
- 1 or 3-hole installation
- Optional deck plate included
- Metal lever handle
- Meets ANSI/NSF 61-9
- ASME A112.18.1/CSA B125 certified
- Complies with .25% weighted average lead content on wetted surfaces

90-KV-DC — SINGLE HANDLE – PULL-DOWN SERIES

HW Part Number	Description	Cartridge	Case Qty.
90-KV-DCCH-AD-Z	Chrome	Ceramic	3
90-KV-DCSS-AD-Z	Stainless steel	Ceramic	3

CERTIFICATIONS

CH SS

GENERAL FEATURES

- Pull-down 2-function spray head
- Flexible stainless steel spring
- 1 or 3-hole installation
- Optional deck plate included
- Metal lever handle
- Meets ANSI/NSF 61-9
- ASME A112.18.1/CSA B125 certified
- Complies with .25% weighted average lead content on wetted surfaces

100-KVD-CY — SINGLE HANDLE – PULL-DOWN SERIES

HW Part Number	Description	Cartridge	Case Qty.
100-KVD-CYCH-AD-Z	Chrome	Ceramic	3
100-KVD-CYBN-AD-Z	PVD brushed nickel	Ceramic	3

GENERAL FEATURES

- Pull-down 2-function spray head
- 3-hole installation
- Matching side soap dispenser
- Metal lever handle
- Meets ANSI/NSF 61-9
- ASME A112.18.1/CSA B125 certified
- Complies with .25% weighted average lead content on wetted surfaces

CERTIFICATIONS

CH BN

110-KVD-CYS — SINGLE HANDLE – PULL-DOWN SERIES

HW Part Number	Description	Cartridge	Case Qty.
110-KVD-CYSCH-AD-Z	Chrome	Ceramic	3
110-KVD-CYSSS-AD-Z	Stainless steel	Ceramic	3

GENERAL FEATURES

- Pull-down 2-function spray head
- 8" center distance
- 1 or 3-hole installation
- Optional deck plate included
- Metal lever handle
- Meets ANSI/NSF 61-9
- ASME A112.18.1/CSA B125 certified
- Complies with .25% weighted average lead content on wetted surfaces

CERTIFICATIONS

CH SS

250-KVD-C — SINGLE HANDLE – PULL-DOWN SERIES

HW Part Number	Description	Cartridge	Case Qty.
250-KVD-CCH-AD-Z	Chrome	Ceramic	3
250-KVD-CBN-AD-Z	PVD brushed nickel	Ceramic	3
250-KVD-CBB-AD-Z	Brushed bronze	Ceramic	3

GENERAL FEATURES

- Pull-down 2-function spray head
- 8" center distance
- 1 or 3-hole installation
- Optional deck plate included
- Metal lever handle
- Meets ANSI/NSF 61-9
- ASME A112.18.1/CSA B125 certified
- Complies with .25% weighted average lead content on wetted surfaces

CERTIFICATIONS

CH BN BB

40-K82-CY — TWO HANDLE – HI-RISE SPOUT SERIES

HW Part Number	Description	Cartridge	Case Qty.
40-K82-CYCH-AD-Z	Chrome	Ceramic	6
40-K82-CYBN-AD-Z	PVD brushed nickel	Ceramic	6
40-K82-CYBB-AD-Z	Brushed bronze	Ceramic	6

GENERAL FEATURES

- Hi-rise spout
- 8" center distance
- Matching side-spray
- Metal decorative lever handles
- 4-hole installation
- Meets ANSI/NSF 61-9
- ASME A112.18.1/CSA B125 certified
- Complies with .25% weighted average lead content on wetted surfaces

CERTIFICATIONS

CH BN BB

150-K81-CY — SINGLE HANDLE – HI-RISE SPOUT SERIES

HW Part Number	Description	Cartridge	Case Qty.
150-K81-CYCH-AD-Z	Chrome	Ceramic	6
150-K81-CYBN-AD-Z	PVD brushed nickel	Ceramic	6

GENERAL FEATURES

- Hi-rise spout
- Matching side-spray
- Metal closed loop handle
- 3-hole installation
- Meets ANSI/NSF 61-9
- ASME A112.18.1/CSA B125 certified
- Complies with .25% weighted average lead content on wetted surfaces

CERTIFICATIONS

CH BN

3060-5030 — SOAP DISPENSER

HW Part Number	Description	Cartridge	Case Qty.
3060-5030-CH-A	Chrome	–	20
3060-5030-BN-A	PVD brushed nickel	–	20
3060-5030-BB-A	Brushed bronze	–	20

GENERAL FEATURES

- Cast brass dispenser body
- Mounts from top of sink
- Plastic canister holds up to 16.9 oz. of liquid soap

CH BN BB

70-K8-PC — SINGLE HANDLE – PULL-OUT SERIES

HW Part Number	Description	Cartridge	Case Qty.
70-K8-PCCH-AD-Z	Chrome	Ceramic	6
70-K8-PCBN-AD-Z	PVD brushed nickel	Ceramic	6

GENERAL FEATURES

- Pull-out 2-function spray
- 8" center distance
- 1 or 3-hole installation
- Optional deck plate included
- Metal open loop handle
- Meets ANSI/NSF 61-9
- ASME A112.18.1/CSA B125 certified
- Complies with .25% weighted average lead content on wetted surfaces

CERTIFICATIONS

CH BN

80-K8-PC — SINGLE HANDLE – PULL-OUT SERIES

HW Part Number	Description	Cartridge	Case Qty.
80-K8-PCCH-AD-Z	Chrome	Ceramic	6
80-K8-PCBN-AD-Z	PVD brushed nickel	Ceramic	6
80-K8-PCBB-AD-Z	Brushed bronze	Ceramic	6

GENERAL FEATURES

- Pull-out 2-function spray
- 8" center distance
- 1 or 3-hole installation
- Optional deck plate included
- Metal decorative lever handle
- Meets ANSI/NSF 61-9
- ASME A112.18.1/CSA B125 certified
- Complies with .25% weighted average lead content on wetted surfaces

CERTIFICATIONS

CH BN BB

245-K8P-C — SINGLE HANDLE – PULL-OUT SERIES

HW Part Number	Description	Cartridge	Case Qty.
245-K8P-CCH-AD-Z	Chrome	Ceramic	6
245-K8P-CBN-AD-Z	PVD brushed nickel	Ceramic	6
245-K8P-CBB-AD-Z	Brushed bronze	Ceramic	6

GENERAL FEATURES

- Pull-out 2-function spray
- 8" center distance
- 1 or 3-hole installation
- Optional deck plate included
- Metal lever handle
- Meets ANSI/NSF 61-9
- ASME A112.18.1/CSA B125 certified
- Complies with .25% weighted average lead content on wetted surfaces

CERTIFICATIONS

CH BN BB

AQUEOUS

LAVATORY FAUCETS

10-B41-W — LAVATORY – SINGLE HANDLE – BASIC SERIES

HW Part Number	Description	Cartridge	Case Qty.
10-B41-WYCH-AD-Z	Chrome w/pop-up	Washerless	6

GENERAL FEATURES

- 4" center distance
- Acrylic handle
- Meets ANSI/NSF 61-9
- ASME A112.18.1/CSA B125 certified
- Complies with .25% weighted average lead content on wetted surfaces

CERTIFICATIONS

CH

10-B42-W — LAVATORY – TWO HANDLE – BASIC SERIES

HW Part Number	Description	Cartridge	Case Qty.
10-B42-WNCH-AD-Z	Chrome less pop-up	Washerless	6
10-B42-WYCH-AD-Z	Chrome w/pop-up	Washerless	6

GENERAL FEATURES

- 4" center distance
- Acrylic handles
- Meets ANSI/NSF 61-9
- ASME A112.18.1/CSA B125 certified
- Complies with .25% weighted average lead content on wetted surfaces

CERTIFICATIONS

CH

11-B42-WY — LAVATORY – TWO HANDLE – BASIC SERIES

HW Part Number	Description	Cartridge	Case Qty.
11-B42-WYCH-AD-Z	Chrome w/pop-up	Washerless	6

GENERAL FEATURES

- 4" center distance
- Metal lever handles
- Meets ANSI/NSF 61-9
- ASME A112.18.1/CSA B125 certified
- Complies with .25% weighted average lead content on wetted surfaces

CERTIFICATIONS

CH

30-B41-W — LAVATORY – SINGLE HANDLE – BASIC SERIES

HW Part Number	Description	Cartridge	Case Qty.
30-B41-WNCH-AD-Z	Chrome less pop-up	Washerless	6
30-B41-WYCH-AD-Z	Chrome w/pop-up	Washerless	6
30-B41-WYBN-AD-Z	PVD brushed nickel w/pop-up	Washerless	6

GENERAL FEATURES

- 4" center distance
- Metal lever handle
- Meets ANSI/NSF 61-9
- ASME A112.18.1/CSA B125 certified
- Complies with .25% weighted average lead content on wetted surfaces

CERTIFICATIONS

CH BN

210-B41-CY — LAVATORY – SINGLE LEVER HANDLE – BASIC SERIES

HW Part Number	Description	Cartridge	Case Qty.
210-B41-CYCH-AD-Z	Chrome w/pop-up	Washerless	6
210-B41-CYBN-AD-Z	PVD brushed nickel w/pop-up	Washerless	6
210-B41-CYBB-AD-Z	Brushed bronze w/pop-up	Washerless	6

GENERAL FEATURES

- 4"center distance
- Metal lever handle
- Meets ANSI/NSF 61-9
- ASME A112.18.1/CSA B125 certified
- Complies with .25% weighted average lead content on wetted surfaces

CERTIFICATIONS

CH BN BB

10-B82-W — TUB AND SHOWER – BASIC SERIES

HW Part Number	Description	Cartridge	Case Qty.
10-B82-WCH-AD	Chrome	Washerless	6

GENERAL FEATURES

- Self-cleaning 2.5 GPM showerhead
- Combination unions on valves for threaded or solder connection
- Acrylic handles
- 1/2" threaded tub spout with diverter
- Metal construction
- Full tub and shower kit
- ASME A112.18.1/CSA B125 certified

CERTIFICATIONS

CH

10-B83-W — TUB AND SHOWER – BASIC SERIES

HW Part Number	Description	Cartridge	Case Qty.
10-B83-WCH-AD	Chrome	Washerless	6

GENERAL FEATURES

- Self-cleaning 2.5 GPM showerhead
- Combination unions on valves for threaded or solder connection
- Acrylic handles
- Acrylic handle diverter
- 1/2" threaded tub spout
- Metal construction
- Full tub and shower kit
- ASME A112.18.1/CSA B125 certified

CERTIFICATIONS

CH

20-B41-CY — LAVATORY – SINGLE HANDLE – TRADITIONAL SERIES

HW Part Number	Description	Cartridge	Case Qty.
20-B41-CYCH-AD-Z	Chrome w/pop-up	Ceramic	6
20-B41-CYBN-AD-Z	PVD brushed nickel w/pop-up	Ceramic	6
20-B41-CYSLCH-AD-Z	Chrome w/pop-up and 20" x 3/8" compression braided supply lines installed	Ceramic	6

GENERAL FEATURES

- 4" center distance
- Metal lever handle
- Meets ANSI/NSF 61-9
- ASME A112.18.1/CSA B125 certified
- Complies with .25% weighted average lead content on wetted surfaces

CERTIFICATIONS

CH BN

240-B41-CY — LAVATORY – SINGLE LEVER HANDLE – TRADITIONAL SERIES

HW Part Number	Description	Cartridge	Case Qty.
240-B41-CYCH-AD-Z	Chrome w/pop-up	Ceramic	6
240-B41-CYBN-AD-Z	PVD brushed nickel w/pop-up	Ceramic	6

GENERAL FEATURES

- 4"center distance
- Metal lever handle
- Optional deck plate included
- Meets ANSI/NSF 61-9
- ASME A112.18.1/CSA B125 certified
- Complies with .25% weighted average lead content on wetted surfaces

CERTIFICATIONS

CH BN

20-B42-CY — LAVATORY – TWO HANDLE – TRADITIONAL SERIES

HW Part Number	Description	Cartridge	Case Qty.
20-B42-CYCH-AD-Z	Chrome w/pop-up	Ceramic	6
20-B42-CYBN-AD-Z	PVD brushed nickel w/pop-up	Ceramic	6

GENERAL FEATURES

- 4"center distance
- Metal lever handles
- Meets ANSI/NSF 61-9
- ASME A112.18.1/CSA B125 certified
- Complies with .25% weighted average lead content on wetted surfaces

CERTIFICATIONS

CH BN

220-B42-CY — LAVATORY – TWO HANDLE – TRADITIONAL SERIES

HW Part Number	Description	Cartridge	Case Qty.
220-B42-CYCH-AD-Z	Chrome w/pop-up	Washerless	6
220-B42-CYBN-AD-Z	PVD brushed nickel w/pop-up	Washerless	6
220-B42-CYBB-AD-Z	Brushed bronze w/pop-up	Washerless	6

GENERAL FEATURES

- 4"center distance
- Metal lever handles
- Meets ANSI/NSF 61-9
- ASME A112.18.1/CSA B125 certified
- Complies with .25% weighted average lead content on wetted surfaces

CERTIFICATIONS

CH BN BB

20-B82-CY — LAVATORY – WIDE SPREAD – TWO HANDLE – TRADITIONAL SERIES

HW Part Number	Description	Cartridge	Case Qty.
20-B82-CYCH-AD-Z	Chrome w/pop-up	Ceramic	6
20-B82-CYBN-AD-Z	PVD brushed nickel w/pop-up	Ceramic	6

GENERAL FEATURES

- 6" - 8" center distance bath faucet
- Metal lever handles
- 3-hole installation
- Meets ANSI/NSF 61-9
- ASME A112.18.1/CSA B125 certified
- Complies with .25% weighted average lead content on wetted surfaces

CERTIFICATIONS

CH BN

20-BV2-TN — ROMAN TUB – TWO HANDLE – TRADITIONAL SERIES

HW Part Number	Description	Cartridge	Case Qty.
20-BV2-TNCH-AD	Chrome	–	6
20-BV2-TNBN-AD	PVD brushed nickel	–	6

GENERAL FEATURES

- Trim only
- 8" - 12" center distance
- Roman tub filler
- Metal lever handles
- 3-hole installation
- Must be used with 900-RTAD Roman tub rough-in

CERTIFICATIONS

CH BN

30-BN1-W — TUB AND SHOWER KIT – TRADITIONAL SERIES

HW Part Number	Description	Cartridge	Case Qty.
30-BN1-WCH-AD	Chrome	Washerless	6
30-BN1-WBN-AD	PVD brushed nickel	Washerless	6

GENERAL FEATURES

- Self-cleaning 2.5 GPM showerhead
- Single lever handle
- Stainless steel ball washerless design
- Tub spout with diverter
- ASME A112.18.1/CSA B125 certified

CERTIFICATIONS

CH BN

140-B42-CY — LAVATORY – METAL TEAPOT SERIES

HW Part Number	Description	Cartridge	Case Qty.
140-B42-CYCH-AD-Z	Chrome w/pop-up	Ceramic	6
140-B42-CYBN-AD-Z	PVD brushed nickel w/pop-up	Ceramic	6
140-B42-CYBB-AD-Z	Brushed bronze w/pop-up	Ceramic	6

GENERAL FEATURES

- 4" center distance
- Decorative lever handles
- Meets ANSI/NSF 61-9
- ASME A112.18.1/CSA B125 certified
- Complies with .25% weighted average lead content on wetted surfaces

CERTIFICATIONS

CH BN BB

140-B82-CY — LAVATORY – WIDE SPREAD – METAL TEAPOT SERIES

HW Part Number	Description	Cartridge	Case Qty.
140-B82-CYCH-AD-Z	Chrome w/pop-up	Ceramic	6
140-B82-CYBN-AD-Z	PVD brushed nickel w/pop-up	Ceramic	6
140-B82-CYBB-AD-Z	Brushed bronze w/pop-up	Ceramic	6

GENERAL FEATURES

- 6" - 8" center distance bath faucet
- Decorative lever handles
- 3-hole installation
- Meets ANSI/NSF 61-9
- ASME A112.18.1/CSA B125 certified
- Complies with .25% weighted average lead content on wetted surfaces

CERTIFICATIONS

CH BN BB

140-BV2-TN — ROMAN TUB – METAL TEAPOT SERIES

HW Part Number	Description	Cartridge	Case Qty.
140-BV2-TNCH-AD	Chrome	–	6
140-BV2-TNBN-AD	PVD brushed nickel	–	6
140-BV2-TNBB-AD	Brushed bronze	–	6

GENERAL FEATURES

- Trim only
- 8" - 12" center distance
- Roman tub filler
- Decorative lever handles
- 3-hole installation
- Must be used with 900-RTAD Roman tub rough-in

CERTIFICATIONS

CH BN BB

40-B42-CY — LAVATORY – "J" SPOUT SERIES

HW Part Number	Description	Cartridge	Case Qty.
40-B42-CYCH-AD-Z	Chrome w/pop-up	Ceramic	6
40-B42-CYBN-AD-Z	PVD brushed nickel w/pop-up	Ceramic	6
40-B42-CYBB-AD-Z	Brushed bronze w/pop-up	Ceramic	6

GENERAL FEATURES

- 4" center distance
- Decorative "J" spout
- Decorative lever handles
- 1 or 3 hole installation
- Optional escutcheon included
- Meets ANSI/NSF 61-9
- ASME A112.18.1/CSA B125 certified
- Complies with .25% weighted average lead content on wetted surfaces

CERTIFICATIONS

CH BN BB

40-B82-CY — LAVATORY – WIDE SPREAD – "J" SPOUT SERIES

HW Part Number	Description	Cartridge	Case Qty.
40-B82-CYCH-AD-Z	Chrome w/pop-up	Ceramic	6
40-B82-CYBN-AD-Z	PVD brushed nickel w/pop-up	Ceramic	6
40-B82-CYBB-AD-Z	Brushed bronze w/pop-up	Ceramic	6

GENERAL FEATURES

- 6" - 8" center distance bath faucet
- Decorative "J" spout
- Decorative lever handles
- 3-hole installation
- Meets ANSI/NSF 61-9
- ASME A112.18.1/CSA B125 certified
- Complies with .25% weighted average lead content on wetted surfaces

CERTIFICATIONS

CH BN BB

40-BV2-TN — ROMAN TUB – "J" SPOUT SERIES

HW Part Number	Description	Cartridge	Case Qty.
40-BV2-TNCH-AD	Chrome	–	6
40-BV2-TNBN-AD	PVD brushed nickel	–	6
40-BV2-TNBB-AD	Brushed bronze	–	6

GENERAL FEATURES

- Trim only
- 8" - 12" center distance
- Decorative "J" spout
- Roman tub filler
- Decorative lever handles
- 3-hole installation
- Must be used with 900-RTAD Roman tub rough-in

CERTIFICATIONS

CH BN BB

230-B42-CY — LAVATORY – TWO HANDLE – "J" SPOUT SERIES

HW Part Number	Description	Cartridge	Case Qty.
230-B42-CYCH-AD-Z	Chrome w/pop-up	Ceramic	6
230-B42-CYBN-AD-Z	PVD brushed nickel w/pop-up	Ceramic	6
230-B42-CYBB-AD-Z	Brushed bronze w/pop-up	Ceramic	6

GENERAL FEATURES

- 4" center distance
- Decorative lever handles
- 3-hole installation
- Meets ANSI/NSF 61-9
- ASME A112.18.1/CSA B125 certified
- Complies with .25% weighted average lead content on wetted surfaces

CERTIFICATIONS

CH BN BB

230-B82-CY — LAVATORY – WIDE SPREAD – "J" SPOUT SERIES

HW Part Number	Description	Cartridge	Case Qty.
230-B82-CYCH-AD-Z	Chrome w/pop-up	Ceramic	6
230-B82-CYBN-AD-Z	PVD brushed nickel w/pop-up	Ceramic	6
230-B82-CYBB-AD-Z	Brushed bronze w/pop-up	Ceramic	6

GENERAL FEATURES

- 6" - 8" center distance bath faucet
- Decorative lever handles
- 3-hole installation
- Meets ANSI/NSF 61-9
- ASME A112.18.1/CSA B125 certified
- Complies with .25% weighted average lead content on wetted surfaces

CERTIFICATIONS

CH BN BB

230-BV2-TN — ROMAN TUB – "J" SPOUT SERIES

HW Part Number	Description	Cartridge	Case Qty.
230-BV2-TNCH-AD	Chrome	–	6
230-BV2-TNBN-AD	PVD brushed nickel	–	6
230-BV2-TNBB-AD	Brushed bronze	–	6

GENERAL FEATURES

- Trim only
- 8" - 12" center distance
- Roman tub filler
- Decorative lever handles
- 3-hole installation
- Must be used with 900-RTAD Roman tub rough-in

CERTIFICATIONS

CH BN BB

120-B42-CY — LAVATORY – SCROLL SERIES

HW Part Number	Description	Cartridge	Case Qty.
120-B42-CYCH-AD-Z	Chrome w/pop-up	Ceramic	6
120-B42-CYBN-AD-Z	PVD brushed nickel w/pop-up	Ceramic	6

GENERAL FEATURES

- 4" center distance
- Decorative scroll lever handles
- Meets ANSI/NSF 61-9
- ASME A112.18.1/CSA B125 certified
- Complies with .25% weighted average lead content on wetted surfaces

CERTIFICATIONS

CH BN

120-B82-CY — LAVATORY – WIDE SPREAD – SCROLL SERIES

HW Part Number	Description	Cartridge	Case Qty.
120-B82-CYCH-AD-Z	Chrome w/pop-up	Ceramic	6
120-B82-CYBN-AD-Z	PVD brushed nickel w/pop-up	Ceramic	6

GENERAL FEATURES

- 6" - 8" center distance bath faucet
- Decorative scroll lever handles
- 3-hole installation
- Meets ANSI/NSF 61-9
- ASME A112.18.1/CSA B125 certified
- Complies with .25% weighted average lead content on wetted surfaces

CERTIFICATIONS

CH BN

120-BV2-TN — ROMAN TUB – SCROLL SERIES

HW Part Number	Description	Cartridge	Case Qty.
120-BV2-TNCH-AD	Chrome	–	6
120-BV2-TNBN-AD	PVD brushed nickel	–	6

GENERAL FEATURES

- Trim only
- 8" - 12" center distance
- Roman tub filler
- Decorative scroll lever handles
- 3-hole installation
- Must be used with 900-RTAD Roman tub rough-in

CERTIFICATIONS

CH BN

50-B42-CY — LAVATORY – VICTORIAN SERIES

HW Part Number	Description	Cartridge	Case Qty.
50-B42-CYBN-AD-Z	PVD brushed nickel w/pop-up	Ceramic	6
50-B42-CYBB-AD-Z	Brushed bronze w/pop-up	Ceramic	6

GENERAL FEATURES

- 4" center distance
- Decorative Victorian style lever handles
- Meets ANSI/NSF 61-9
- ASME A112.18.1/CSA B125 certified
- Complies with .25% weighted average lead content on wetted surfaces

CERTIFICATIONS

BN BB

50-B82-CY — LAVATORY – WIDE SPREAD – VICTORIAN SERIES

HW Part Number	Description	Cartridge	Case Qty.
50-B82-CYCH-AD-Z	Chrome w/pop-up	Ceramic	6
50-B82-CYBN-AD-Z	PVD brushed nickel w/pop-up	Ceramic	6
50-B82-CYBB-AD-Z	Brushed bronze w/pop-up	Ceramic	6

GENERAL FEATURES

- 6" - 8" center distance
- Decorative Victorian style lever handles
- Meets ANSI/NSF 61-9
- ASME A112.18.1/CSA B125 certified
- Complies with .25% weighted average lead content on wetted surfaces

CERTIFICATIONS

CH BN BB

50-BV2-TN — ROMAN TUB – VICTORIAN SERIES

HW Part Number	Description	Cartridge	Case Qty.
50-BV2-TNCH-AD	Chrome	–	6
50-BV2-TNBN-AD	PVD brushed nickel	–	6
50-BV2-TNBB-AD	Brushed bronze	–	6

GENERAL FEATURES

- Trim only
- 8" - 12" center distance
- Roman tub filler
- Decorative Victorian style lever handles
- 3-hole installation
- Must be used with 900-RTAD Roman tub rough-in

CERTIFICATIONS

CH BN BB

30-BN1-PSOT — SHOWER ONLY TRIM KIT

HW Part Number	Description	Cartridge	Case Qty.
30-BN1-PSOTCH-AD	Chrome shower only trim kit w/acrylic & lever handle	–	6
30-BN1-PSOTBN-AD	PVD brushed nickel shower only trim kit w/ lever handle only	–	6

GENERAL FEATURES

- Trim kit
- 2.5 GPM self-cleaning showerhead
- Works with either 900-STAD or 900-NSAD pressure balancing valves

CERTIFICATIONS

ADA Compliant

CH BN

30-BN1-PTRM — TUB & SHOWER TRIM KIT

HW Part Number	Description	Cartridge	Case Qty.
30-BN1-PTRMCH-AD	Chrome tub & shower trim kit w/acrylic & lever handle	–	6
30-BN1-PTRMBN-AD	PVD brushed nickel w/lever handle only	–	6

GENERAL FEATURES

- Trim kit
- Tub spout w/diverter
- 2.5 GPM self-cleaning showerhead
- Works with either 900-STAD or 900-NSAD pressure balancing valves

CERTIFICATIONS

ADA Compliant

CH BN

230-BN1-PTRM — TUB & SHOWER TRIM KIT – "J" SPOUT SERIES

HW Part Number	Description	Cartridge	Case Qty.
230-BN1-PTRMCH-AD	Chrome	–	12
230-BN1-PTRMBN-AD	PVD brushed nickel	–	12
230-BN1-PTRMBB-AD	Brushed bronze	–	12

GENERAL FEATURES

- Trim kit
- Tub spout diverter
- Decorative lever handle
- Works with either 900-STAD or 900-NSAD pressure balancing valves

CERTIFICATIONS

ADA Compliant

CH BN BB

900-ST-AD PRESSURE BALANCING VALVE

HW Part Number	Description	Cartridge	Case Qty.
900-ST-AD	With integral stops	Washerless	12

GENERAL FEATURES

- Pressure balancing valve
- Fits any Aqueous brand handle trim kit
- Maintains water temperature +/- 3°F
- Protection against scalding
- 1/2" IPS and MPT connections
- Works in shower only or tub/shower applications
- Integral stops
- Brass construction
- Includes mud guard
- ASME A112.18.1/CSA B125 certified

CERTIFICATIONS

900-NS-AD PRESSURE BALANCING VALVE

HW Part Number	Description	Cartridge	Case Qty.
900-NS-AD	–	Washerless	12

GENERAL FEATURES

- Pressure balancing valve
- Fits any Aqueous brand handle trim kit
- Maintains water temperature +/- 3°F
- Protection against scalding
- Works in shower only or tub/shower applications
- Brass construction
- ASME A112.18.1/CSA B125 certified

CERTIFICATIONS

900-RT-AD ROMAN TUB ROUGH-IN

HW Part Number	Description	Cartridge	Case Qty.
900-RT-AD	Roman tub rough-in	Ceramic	6

GENERAL FEATURES

- Brass waterways
- Stainless steel supply lines
- For use with any Aqueous decorative Roman tub trim kit
- ASME A112.18.1/CSA B125 certified

CERTIFICATIONS

TUB & SHOWER FAUCET COMPONENTS

VALVE

+

FULL TRIM KIT

= Total Aqueous Tub & Shower Faucet

VALVE

+

SHOWERHEAD & ARM

+

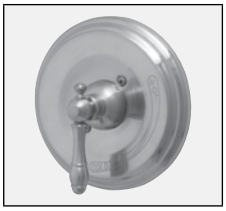
HANDLE KIT

= Total Aqueous Shower Only Faucet

VALVE

+

SHOWERHEAD & ARM

+

HANDLE KIT

+

TUB SPOUT

= Total Aqueous Tub and Shower Faucet

904-10 SHOWERHEAD

HW Part Number	Description	Cartridge	Case Qty.
904-10CH-AD	Chrome showerhead	–	12
904-10BN-AD	PVD brushed nickel showerhead	–	12
904-10BB-AD	Brushed bronze showerhead	–	12

GENERAL FEATURES

- 2.5 GPM self-cleaning showerhead
- Includes matching arm and flange
- ASME A112.18.1/CSA B125 certified

CERTIFICATIONS

CH BN BB

904-40 SHOWERHEAD

HW Part Number	Description	Cartridge	Case Qty.
904-40CH-AD	Chrome showerhead	–	12
904-40BN-AD	PVD brushed nickel showerhead	–	12
904-40BB-AD	Brushed bronze showerhead	–	12

GENERAL FEATURES

- Traditional design showerhead
- Includes matching arm and flange
- ASME A112.18.1/CSA B125 certified

CERTIFICATIONS

CH BN BB

904-50 SHOWERHEAD

HW Part Number	Description	Cartridge	Case Qty.
904-50CH-AD	Chrome showerhead	–	12
904-50BN-AD	PVD brushed nickel showerhead	–	12
904-50BB-AD	Brushed bronze showerhead	–	12

GENERAL FEATURES

- 8" sunflower showerhead
- Includes matching arm and flange
- ASME A112.18.1/CSA B125 certified

CERTIFICATIONS

CH BN BB

904-230 SHOWERHEAD

HW Part Number	Description	Cartridge	Case Qty.
904-230CH-AD	Chrome showerhead	–	12
904-230BN-AD	PVD brushed nickel showerhead	–	12
904-230BB-AD	Brushed bronze showerhead	–	12

GENERAL FEATURES

- Tulip design showerhead
- Includes matching decorative arm and flange
- ASME A112.18.1/CSA B125 certified

CERTIFICATIONS

CH BN BB

905-20 HANDLE TRIM

HW Part Number	Description	Cartridge	Case Qty.
905-20CH-AD	Chrome shower handle & escutcheon	–	12
905-20BN-AD	PVD brushed nickel shower handle & escutcheon	–	12

GENERAL FEATURES

- Trim only
- Single metal lever handle
- Matching escutcheon
- Laser-etched hot & cold markings
- Matching retaining nut and valve sleeve
- Must use with Aqueous pressure balance valves 900-NSAD or 900-STAD

CERTIFICATIONS

ADA Compliant

CH BN

905-30 HANDLE TRIM – TEAPOT SERIES

HW Part Number	Description	Cartridge	Case Qty.
905-30CH-AD	Chrome shower handle & escutcheon	–	12
905-30BN-AD	PVD brushed nickel shower handle & escutcheon	–	12
905-30BB-AD	Brushed bronze shower handle & escutcheon	–	12

GENERAL FEATURES

- Trim only
- Single metal decorative handle
- Matching escutcheon
- Laser-etched hot & cold markings on chrome and brushed nickel; colorized markings on brushed bronze
- Matching retaining nut and valve sleeve
- Must use with Aqueous pressure balance valves 900-NSAD or 900-STAD

CERTIFICATIONS

ADA Compliant

CH BN BB

905-40 HANDLE TRIM – "J" SPOUT SERIES

HW Part Number	Description	Cartridge	Case Qty.
905-40CH-AD	Chrome shower handle & escutcheon	–	12
905-40BN-AD	PVD brushed nickel shower handle & escutcheon	–	12
905-40BB-AD	Brushed bronze shower handle & escutcheon	–	12

GENERAL FEATURES

- Trim only
- Single metal decorative handle
- Matching escutcheon
- Laser-etched hot & cold markings on chrome and brushed nickel; colorized markings on brushed bronze
- Matching retaining nut and valve sleeve
- Must use with Aqueous pressure balance valves 900-NSAD or 900-STAD

CERTIFICATIONS

ADA Compliant

CH BN BB

907-10 TUB SPOUT – THREADED

CH BN BB

HW Part Number	Description	Cartridge	Case Qty.
907-10CH-AD	Chrome tub spout	–	12
907-10BN-AD	PVD brushed nickel tub spout	–	12
907-10BB-AD	Brushed bronze tub spout	–	12

GENERAL FEATURES

- Zinc tub spout with diverter
- 1/2" IPS connection

907-15 TUB SPOUT – SLIP FIT

CH BN BB

HW Part Number	Description	Cartridge	Case Qty.
907-15CH-AD	Chrome tub spout	–	12
907-15BN-AD	PVD brushed nickel tub spout	–	12
907-15BB-AD	Brushed bronze tub spout	–	12

GENERAL FEATURES

- Zinc tub spout with diverter
- 1/2" (5/8 O.D.) CTS slip fit

907-30 TUB SPOUT

CH BN BB

HW Part Number	Description	Cartridge	Case Qty.
907-30CH-AD	Chrome tub spout	–	12
907-30BN-AD	PVD brushed nickel tub spout	–	12
907-30BB-AD	Brushed bronze tub spout	–	12

GENERAL FEATURES

- Decorative zinc tub spout with diverter
- 1/2" IPS connection

907-230 TUB SPOUT

CH BN BB

HW Part Number	Description	Cartridge	Case Qty.
907-230CH-AD	Chrome tub spout	–	12
907-230BN-AD	PVD brushed nickel tub spout	–	12
907-230BB-AD	Brushed bronze tub spout	–	12

GENERAL FEATURES

- Decorative zinc tub spout with diverter
- 1/2" IPS connection

10-U42-WN TWO HANDLE – MULTI-PURPOSE SERIES

HW Part Number	Description	Cartridge	Case Qty.
10-U42-WNCH-AD-Z	Chrome	Washerless	6

GENERAL FEATURES

- 4" center distance
- 6" tall spout
- Acrylic handles
- Meets ANSI/NSF 61-9
- ASME A112.18.1/CSA B125 certified
- Complies with .25% weighted average lead content on wetted surfaces

CERTIFICATIONS

CH

15-U42-WN TWO HANDLE – MULTI-PURPOSE SERIES

HW Part Number	Description	Cartridge	Case Qty.
15-U42-WNCH-AD	Chrome	Washerless	12

GENERAL FEATURES

- Laundry faucet
- 4" center distance
- Metal handles
- Includes aerator and hose-end connection
- ASME A112.18.1/CSA B125 certified

CERTIFICATIONS

CH

130-U42-WN — TWO HANDLE – MULTI-PURPOSE SERIES

HW Part Number	Description	Cartridge	Case Qty.
130-U42-WNCH-AD-Z	Chrome	Washerless	6

GENERAL FEATURES

- 4" center distance
- 6" tall spout
- Metal wing handles
- Meets ANSI/NSF 61-9
- ASME A112.18.1/CSA B125 certified
- Complies with .25% weighted average lead content on wetted surfaces

CERTIFICATIONS

CH

3190-41 — TWO HANDLE – MULTI-PURPOSE SERIES

HW Part Number	Description	Cartridge	Case Qty.
3190-41-CH-AD-Z	Chrome	Washerless	6

GENERAL FEATURES

- 8" adjustable wall mount
- Metal lever handles
- Metal body construction
- Includes soap dish
- 2-hole installation
- Meets ANSI/NSF 61-9
- ASME A112.18.1/CSA B125 certified
- Complies with .25% weighted average lead content on wetted surfaces

CERTIFICATIONS

CH

246-U42-WN — TWO HANDLE – MULTI-PURPOSE SERIES

HW Part Number	Description	Cartridge	Case Qty.
246-U42-WNCH-AD-Z	Chrome	Ceramic	6
246-U42-WNBN-AD-Z	PVD brushed nickel	Ceramic	6

GENERAL FEATURES

- 4" center distance
- 6" tall spout
- Metal lever handles
- Meets ANSI/NSF 61-9
- ASME A112.18.1/CSA B125 certified
- Complies with .25% weighted average lead content on wetted surfaces

CERTIFICATIONS

CH BN

1000 BASIC SERIES

CH

HW Part Number	Description	Case Qty.
1000-RHE-3CH-AD	Chrome robe hook	6
1000-TPE-8CH-AD	Chrome paper holder	6
1000-TRE-9CH-AD	Chrome towel ring	6
1000-TBE-18CH-AD	Chrome 18" towel bar	6
1000-TBE-24CH-AD	Chrome 24" towel bar	6

GENERAL FEATURES

- Quick and easy installation
- Zinc and aluminum construction

1100 TRADITIONAL SERIES

CH BN

HW Part Number	Description	Case Qty.
1100-RHC-3CH-AD	Chrome robe hook	6
1100-TPC-8CH-AD	Chrome paper holder	6
1100-TRC-9CH-AD	Chrome towel ring	6
1100-TBC-18CH-AD	Chrome 18" towel bar	6
1100-TBC-24CH-AD	Chrome 24" towel bar	6
1100-RHC-3BN-AD	PVD brushed nickel robe hook	6
1100-TPC-8BN-AD	PVD brushed nickel paper holder	6
1100-TRC-9BN-AD	PVD brushed nickel towel ring	6
1100-TBC-18BN-AD	PVD brushed nickel 18" towel bar	6
1100-TBC-24BN-AD	PVD brushed nickel 24" towel bar	6

GENERAL FEATURES

- Concealed mounting
- Quick and easy installation
- Zinc and aluminum construction

1200 VICTORIAN SERIES

CH BN BB

HW Part Number	Description	Case Qty.
1200-RHC-3CH-AD	Chrome robe hook	6
1200-TPC-8CH-AD	Chrome paper holder	6
1200-TRC-9CH-AD	Chrome towel ring	6
1200-TBC-18CH-AD	Chrome 18" towel bar	6
1200-TBC-24CH-AD	Chrome 24" towel bar	6
1200-RHC-3BN-AD	PVD brushed nickel robe hook	6
1200-TPC-8BN-AD	PVD brushed nickel paper holder	6
1200-TRC-9BN-AD	PVD brushed nickel towel ring	6
1200-TBC-18BN-AD	PVD brushed nickel 18" towel bar	6
1200-TBC-24BN-AD	PVD brushed nickel 24" towel bar	6
1200-RHC-3BB-AD	Brushed bronze robe hook	6
1200-TPC-8BB-AD	Brushed bronze paper holder	6
1200-TRC-9BB-AD	Brushed bronze towel ring	6
1200-TBC-18BB-AD	Brushed bronze 18" towel bar	6
1200-TBC-24BB-AD	Brushed bronze 24" towel bar	6

GENERAL FEATURES

- Concealed mounting
- Quick and easy installation
- Zinc and aluminum construction

1300 SCROLL SERIES

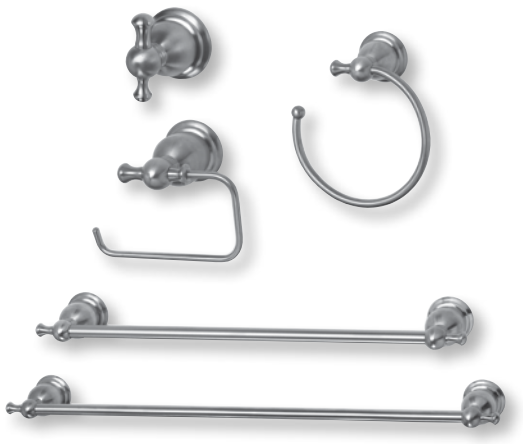

CH BN

HW Part Number	Description	Case Qty.
1300-RHC-3CH-AD	Chrome robe hook	6
1300-TPC-8CH-AD	Chrome paper holder	6
1300-TRC-9CH-AD	Chrome towel ring	6
1300-TBC-18CH-AD	Chrome 18" towel bar	6
1300-TBC-24CH-AD	Chrome 24" towel bar	6
1300-RHC-3BN-AD	PVD brushed nickel robe hook	6
1300-TPC-8BN-AD	PVD brushed nickel paper holder	6
1300-TRC-9BN-AD	PVD brushed nickel towel ring	6
1300-TBC-18BN-AD	PVD brushed nickel 18" towel bar	6
1300-TBC-24BN-AD	PVD brushed nickel 24" towel bar	6

GENERAL FEATURES

- Concealed mounting
- Quick and easy installation
- Zinc and aluminum construction

TOSCA®

TOSCA FAUCETS

5 MINUTE FAUCET™
Easy 5-Minute Installation

The 5-Minute Faucet combines Italian-inspired design and engineering, resulting in a high-performance kitchen faucet that is easy and quick to install.

Each Quality Faucet Features:

- A pull-out spray head with two spray functions (aerated and wide) to provide maximum flexibility
- A single lever handle with ceramic cartridge, ensuring smooth and comfortable operation of the faucet
- Installs in 4 easy steps from above the sink

STEP 1: Position base with hex head screw facing front of sink. Tighten the screw with the supplied Allen key

STEP 3: Secure faucet body at base with the supplied Allen key

STEP 2: Insert the faucet body into the base and let the supply lines drop through the sink hole

STEP 4: Attach the supply lines to the water supply valves

Detailed installation video available online at www.5minutefaucet.com.

54-K8-DC — 5-MINUTE FAUCET – SINGLE HANDLE – PULL-OUT SERIES

HW Part Number	Description	Cartridge	Case Qty.
54-K8-DCCH-S	Chrome	Ceramic	3
54-K8-DCSS-S	Stainless steel	Ceramic	3

GENERAL FEATURES

- Pull-out 2-function spray
- Mounts from top of sink
- 1 or 3 hole installation
- Optional deck plate included
- Made in Italy
- Single lever handle
- Meets ANSI/NSF 61-9
- ASME A112.18.1/CSA B125 certified
- Complies with .25% weighted average lead content on wetted surfaces

CERTIFICATIONS

CH SS

51-K8-DC

CUCINA – SINGLE HANDLE – SPRING NECK – PULL-DOWN

HW Part Number	Description	Cartridge	Case Qty.
51-K8-DCSS-P	Stainless steel	Ceramic	4

GENERAL FEATURES

- Single function pull-down spray
- Flexible stainless steel spring
- Braided hose design for maximum functionality
- 1 or 3-hole installation
- Optional deck plate included
- Decorative metal lever handle
- Made in Italy
- Meets ANSI/NSF 61-9
- ASME A112.18.1/CSA B125 certified
- Complies with .25% weighted average lead content on wetted surfaces

CERTIFICATIONS

SS

52-K8-DC

CUCINA – SINGLE HANDLE – TRADITIONAL – PULL DOWN

HW Part Number	Description	Cartridge	Case Qty.
52-K8-DCSS-P	Stainless steel	Ceramic	4

GENERAL FEATURES

- Single function pull-down spray
- 1 or 3-hole installation
- Optional deck plate included
- Decorative metal lever handle
- Made in Italy
- Meets ANSI/NSF 61-9
- ASME A112.18.1/CSA B125 certified
- Complies with .25% weighted average lead content on wetted surfaces

CERTIFICATIONS

SS

53-K8-DC

CUCINA – SINGLE HANDLE – ERGONOMIC – PULL-DOWN

HW Part Number	Description	Cartridge	Case Qty.
53-K8-DCSS-P	Stainless steel	Ceramic	4

GENERAL FEATURES

- Two function pull-down spray
- 1 or 3-hole installation
- Optional deck plate included
- Decorative metal lever handle
- Made in Italy
- Meets ANSI/NSF 61-9
- ASME A112.18.1/CSA B125 certified
- Complies with .25% weighted average lead content on wetted surfaces

CERTIFICATIONS

SS

TOSCA®

TOSCA TUB AND SHOWER COMPONENTS

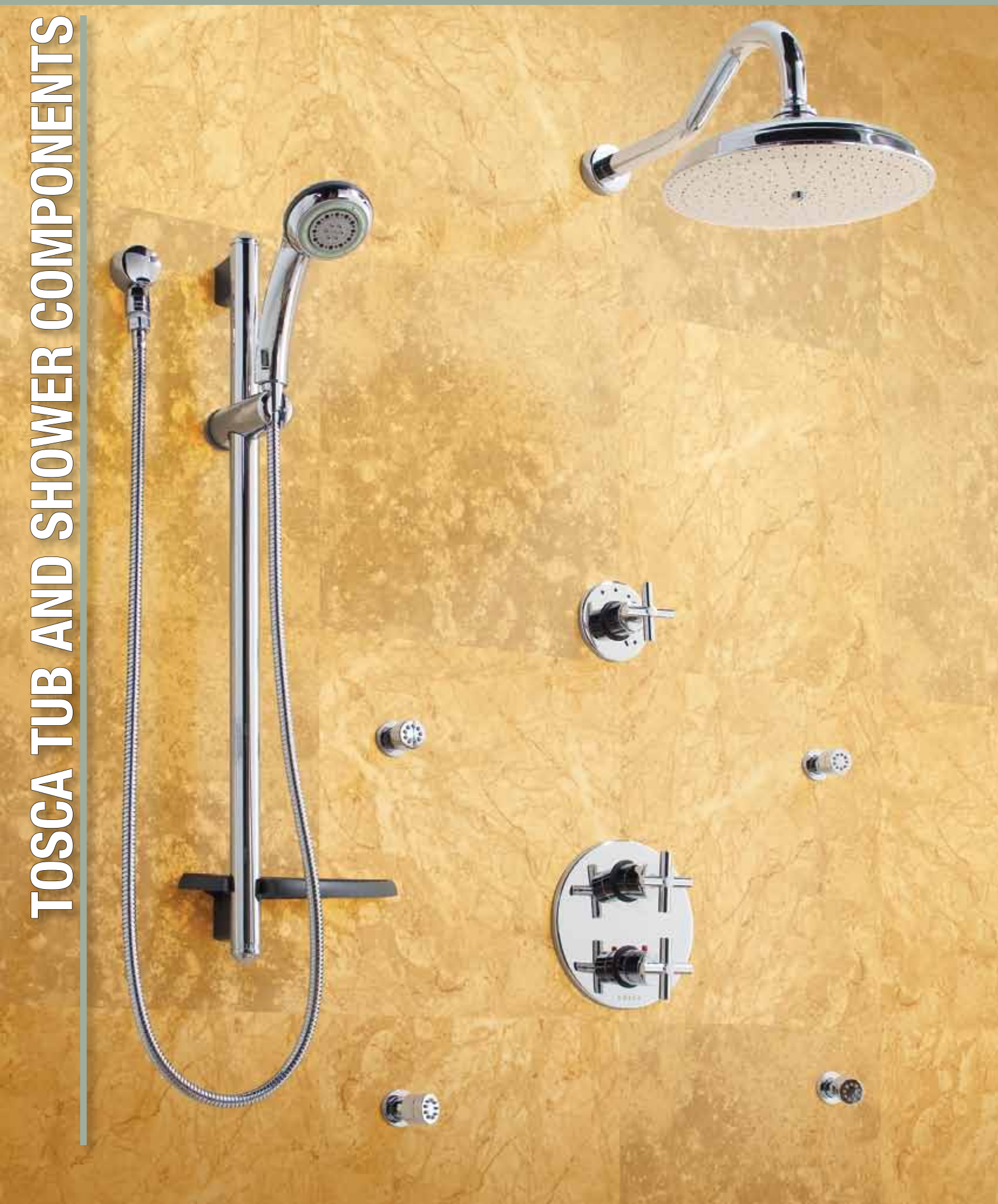

910-75 SPASSO – MULTI-FUNCTION SLIDE-BAR SHOWERHEAD KIT

HW Part Number	Description	Cartridge	Case Qty.
910-75CH-P	Chrome	N/A	
910-75BN-P	Brushed nickel	N/A	

GENERAL FEATURES

- 2-function showerhead
- Made in Italy
- Easy clean spray tips
- Curved slide bar design with adjustable slider
- Extra-long 69" shower hose with vacuum breaker

CERTIFICATIONS

CH BN

909-75 SPASSO – MULTI-FUNCTION WALL-MOUNT SHOWERHEAD KIT

HW Part Number	Description	Cartridge	Case Qty.
909-75CH	Chrome	N/A	
909-75BN	Brushed nickel	N/A	

GENERAL FEATURES

- 2-function showerhead
- Made in Italy
- Extra-long 69" shower hose with vacuum breaker
- Integrated brass wall bracket and waterway included

CERTIFICATIONS

CH BN

904-70 SHOWERHEAD – 12" RAINSHOWER

HW Part Number	Description	Cartridge	Case Qty.
904-70CH-12	Chrome	N/A	
904-70BN-12	Brushed nickel	N/A	

GENERAL FEATURES

- All brass construction
- Made in Italy
- 280 precision-engineered openings provide a relaxing water flow

CH BN

904-75 SPASSO – SHOWERHEAD – MULTI-SETTING

CERTIFICATIONS

CH BN

HW Part Number	Description	Cartridge	Case Qty.
904-75CH	Chrome	N/A	
904-75BN	Brushed nickel	N/A	

GENERAL FEATURES

- 3-function showerhead
- Made in Italy
- Rubber ring for easy positioning
- Easy-clean spray tips

906-76 ERGO – SHOWER ARM

CH BN

HW Part Number	Description	Cartridge	Case Qty.
906-76CH-P	Chrome	N/A	
906-76BN-P	Brushed nickel	N/A	

GENERAL FEATURES

- All brass construction
- Made in Italy
- 12" length and raised bar design for optimal rain showerhead positioning

906-77 RIO – SHOWER ARM

CH BN

HW Part Number	Description	Cartridge	Case Qty.
906-77CH-P	Chrome	N/A	
906-77BN-P	Brushed nickel	N/A	

GENERAL FEATURES

- All brass construction
- Made in Italy
- 6" length for optimal showerhead positioning

908-78 VERONA – BODY SPRAY

HW Part Number	Description	Cartridge	Case Qty.
908-78CH-P	Chrome	N/A	
908-78BN-P	Brushed nickel	N/A	

GENERAL FEATURES

- Made in Italy
- Single-function body spray
- Single-function body spray
- Pivots for full shower coverage

CERTIFICATIONS

CH BN

908-80 FIROELLA – BODY SPRAY

HW Part Number	Description	Cartridge	Case Qty.
908-80CH	Chrome	N/A	
908-80BN	Brushed nickel	N/A	

GENERAL FEATURES

- Made in Italy
- Single-function body spray
- Pivots for full shower coverage

CERTIFICATIONS

CH BN

THERMOSTATIC MIXING VALVE WITH VOLUME CONTROL

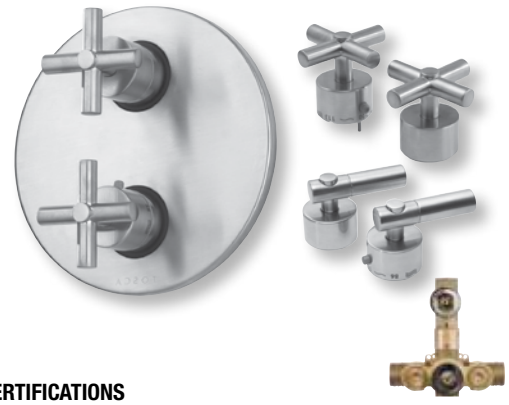

HW Part Number	Description	Cartridge	Case Qty.
901-TVCH	Chrome	Ceramic	
901-TVBN	Brushed nickel	Ceramic	
905-71CH	Chrome cross handle pair	N/A	
905-71BN	Brushed nickel cross handle pair	N/A	
905-72CH	Chrome lever handle pair	N/A	
905-72BN	Brushed nickel lever handle pair	N/A	

GENERAL FEATURES

- All brass construction
- Made in Italy
- Single port exit works with any fixture or diverter
- Cross or lever handle sold separately (905-71BN, 905-71CH, 905-72BN, 905-72CH)
- 3/4" IPS inlet ports
- Escutcheon included
- Complies with ASME A112.18.1 / CSA B125.1
- Handles not included

CERTIFICATIONS

CH BN

5-WAY DIVERTER VALVE

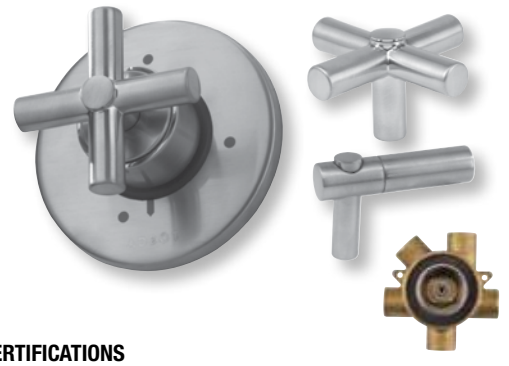

HW Part Number	Description	Cartridge	Case Qty.
902-MPCH	Chrome	N/A	
902-MPBN	Brushed nickel	N/A	
905-73CH	Chrome cross handle	N/A	
905-73BN	Brushed nickel cross handle	N.A	
905-74CH	Chrome lever handle	N/A	
905-74BN	Brushed nickel lever handle	N/A	

GENERAL FEATURES

- All brass construction
- Made in Italy
- Diverts water flow 4 ways, individually (1 shared)
- Cross or lever handle sold separately (905-73BN, 905-73CH, 905-74BN, 905-74CH)
- Escutcheon included
- Handles not included

CERTIFICATIONS

CH BN

VOLUME CONTROL VALVE

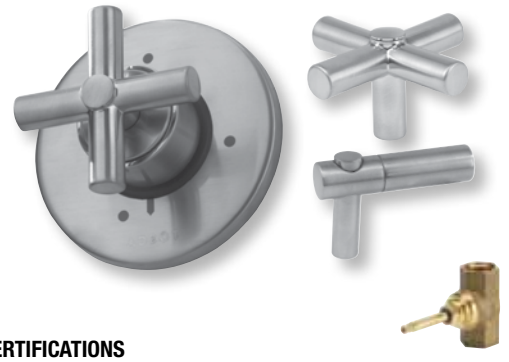

HW Part Number	Description	Cartridge	Case Qty.
903-VCCH	Chrome	N/A	
903-VCBN	Brushed nickel	N/A	
905-73CH	Chrome cross handle	N/A	
905-73BN	Brushed nickel cross handle	N.A	
905-74CH	Chrome lever handle	N/A	
905-74BN	Brushed nickel lever handle	N/A	

GENERAL FEATURES

- All brass construction
- Made in Italy
- Controls water flow to individual fixtures
- Cross or lever handle sold separately (905-73BN, 905-73CH, 905-74BN, 905-74CH)
- Escutcheon included
- Handles not included

CERTIFICATIONS

CH BN

LIMITED LIFETIME WARRANTY

HOMEWERKS WORLDWIDE, LLC warrants to the original consumer purchaser this product to be free from defects in material and workmanship under normal use in residential applications. At its option, the Company will provide repair parts or replace defective product when the product is used in accordance with the manufacturer's specifications.

The Company provides a **Limited 5-Year Warranty** on the finish of this product to the original purchaser. At its option, the Company will provide repair parts or replace defective product when the product is used in accordance with the manufacturer's specifications. Use of mild abrasive, abrasive or chemical cleaners may damage the finish of the faucet. We recommend cleaning your faucet with a soft cloth, moistened with water. Damage resulting from the use of abrasive or chemical cleaners **SHALL VOID THIS WARRANTY.**

This warranty is not applicable to any products or parts of products where damage is caused by use of non-genuine HOMEWERKS WORLDWIDE, LLC parts; is due to installation error, product misuse, negligence or faulty maintenance; or where the product is not installed according to local building codes.

This warranty excludes labor charges or damage incurred during installation, repair or replacement, and any indirect, incidental or consequential damages, losses, injury or costs of any nature. This warranty is in lieu of and excludes all other warranties, conditions and guarantees, whether expressed or implied, including without restriction those of merchantability or fitness of use.

Liability under this warranty will not exceed the purchase price for the product claimed to be defective by the original consumer purchaser. Some states or provinces do not allow the exclusion or limitation of consequential damages so the above limitations or exclusions may not apply. This warranty gives you specific legal rights and you may also have other rights which vary from state to state, or province to province.

Inquiries regarding warranty claims can be directed to HOMEWERKS WORLDWIDE, LLC via phone to (877) 319-3757 or by email to info@homewerksww.com.

Homewerks Worldwide™
MAKING HOMES WORK. INSIDE AND OUT.

HOMEWERKS UTILITY FAUCETS

3190-40 TWO HANDLE – HI-ARC – WALL-MOUNT KITCHEN FAUCET

HW Part Number	Description	Cartridge	Case Qty.
3190-40-CH-B-Z	Chrome	Ceramic	3

GENERAL FEATURES

- 8" adjustable center distance
- Swivel aerator
- 1/2" female thread inlets
- Metal handles
- 1/4-turn drip-free cartridge
- Meets ANSI/NSF 61-9
- ASME A112.18.1/CSA B125 certified
- Complies with .25% weighted average lead content on wetted surfaces

CERTIFICATIONS

CH

3310-150 SINGLE HANDLE – WATER BUBBLER

HW Part Number	Description	Cartridge	Case Qty.
3310-150-CH-B-Z	Chrome	Compression	12

GENERAL FEATURES

- Self-closing
- Single metal handle
- 1/2" female pipe installation
- Meets ANSI/NSF 61-9
- ASME A112.18.1/CSA B125 certified
- Complies with .25% weighted average lead content on wetted surfaces

CERTIFICATIONS

CH

3310-160 SINGLE HANDLE – DRINKING WATER FAUCET

HW Part Number	Description	Cartridge	Case Qty.
3310-160-CH-B-Z	Chrome	Compression	12

GENERAL FEATURES

- Touch flow or continuous flow
- Use in any countertop up to 1" deep
- 1/4" compression inlet connection
- Can be used as a water dispenser or filter
- Meets ANSI/NSF 61-9
- ASME A112.18.1/CSA B125 certified
- Complies with .25% weighted average lead content on wetted surfaces

CERTIFICATIONS

CH

3220-140 TWO HANDLE – LAVATORY FAUCET

HW Part Number	Description	Cartridge	Case Qty.
3220-140-CH-B-Z	Chrome	Washerless	6

GENERAL FEATURES

- 4" center distance
- Metal blade handles
- 1/4-turn drip-free cartridge
- Meets ANSI/NSF 61-9
- ASME A112.18.1/CSA B125 certified
- Complies with .25% weighted average lead content on wetted surfaces

CERTIFICATIONS

ADA CompBant

CH

3210-150 SINGLE HANDLE – BASIN FAUCET

HW Part Number	Description	Cartridge	Case Qty.
3210-150-CH-B-Z	Chrome	Ceramic	6

GENERAL FEATURES

- Hot or cold application
- 1/4-turn drip-free cartridge
- Meets ANSI/NSF 61-9
- ASME A118.12.1/CSA B125 certified
- Complies with .25% weighted average lead content on wetted surfaces

CERTIFICATIONS

CH

3210-151 SINGLE HANDLE – BASIN FAUCET

HW Part Number	Description	Cartridge	Case Qty.
3210-151-CH-B-Z	Chrome	Compression	6

GENERAL FEATURES

- Self-closing
- Hot or cold application
- 1/2" female inlets
- Meets ANSI/NSF 61-9
- ASME A118.12.1/CSA B125 certified
- Complies with .25% weighted average lead content on wetted surfaces

CERTIFICATIONS

CH

3220-40 TWO HANDLE – WALL-MOUNT TUB FAUCET

HW Part Number	Description	Cartridge	Case Qty.
3220-40-CH-B	Chrome	Compression	12

GENERAL FEATURES

- 3-3/8" center distance
- Metal handles
- ASME A112.18. /CSA B125 certified

CERTIFICATIONS

CH

3220-41 TWO HANDLE – ANTI-SIPHON WALL-MOUNT TUB FAUCET

HW Part Number	Description	Cartridge	Case Qty.
3220-41-CH-B	Chrome	Compression	12

GENERAL FEATURES

- 3-3/8" center distance
- Metal handles
- ASME A112.18. /CSA B125 certified

CERTIFICATIONS

CH

3220-15 TWO HANDLE – SHOWER STALL FAUCET

HW Part Number	Description	Cartridge	Case Qty.
3220-15-CH-B	Chrome	Compression	12

GENERAL FEATURES

- 3-3/8" center distance
- Acrylic handles
- Used with top or bottom water supply
- Non-pressure compensating
- Faucet only
- Does not contain anti-scald devices

CH

3310-250 TWO HANDLE – LAUNDRY TRAY FAUCET

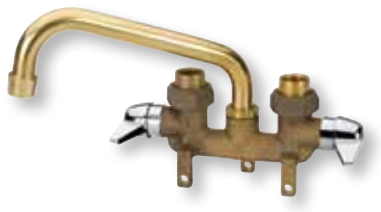

HW Part Number	Description	Cartridge	Case Qty.
3310-250-CH-RB	Rough brass	Washerless	6

GENERAL FEATURES

- Chrome handles
- 3" center distance
- Aerator and hose-end thread
- Mounts on laundry sink with and without mounting block (not included)
- 1/4-turn drip-free cartridge
- ASME A112.18.1/CSA B125 certified

CERTIFICATIONS

RB

3070-250 TWO HANDLE – UTILITY SHOWER KIT

HW Part Number	Description	Cartridge	Case Qty.
3070-250-CH-B	Chrome	Washerless	4

GENERAL FEATURES

- For indoor or outdoor use
- Showerhead included
- Mounts on wall
- Soap holder included

CH

LIMITED 5-YEAR WARRANTY

HOMEWERKS WORLDWIDE, LLC warrants to the original consumer purchaser this product to be free from defects in material and workmanship under normal use in residential applications. At its option, the Company will provide repair parts or replace defective product when the product is used in accordance with the manufacturer's specifications.

The Company provides a **Limited 5-Year Warranty** on the finish of this product to the original purchaser. At its option, the Company will provide repair parts or replace defective product when the product is used in accordance with the manufacturer's specifications. Use of mild abrasive, abrasive or chemical cleaners may damage the finish of the faucet. We recommend cleaning your faucet with a soft cloth, moistened with water. Damage resulting from the use of abrasive or chemical cleaners **SHALL VOID THIS WARRANTY.**

This warranty is not applicable to any products or parts of products where damage is caused by use of non-genuine HOMEWERKS WORLDWIDE, LLC parts; is due to installation error, product misuse, negligence or faulty maintenance; or where the product is not installed according to local building codes.

This warranty excludes labor charges or damage incurred during installation, repair or replacement, and any indirect, incidental or consequential damages, losses, injury or costs of any nature. This warranty is in lieu of and excludes all other warranties, conditions and guarantees, whether expressed or implied, including without restriction those of merchantability or fitness of use.

Liability under this warranty will not exceed the purchase price for the product claimed to be defective by the original consumer purchaser. Some states or provinces do not allow the exclusion or limitation of consequential damages so the above limitations or exclusions may not apply. This warranty gives you specific legal rights and you may also have other rights which vary from state to state, or province to province.

Inquiries regarding warranty claims can be directed to HOMEWERKS WORLDWIDE, LLC via phone to (877) 319-3757 or by email to info@homewerksww.com.

AQUEOUS™

AFFILIATED DISTRIBUTORS
WHERE INDEPENDENTS GROW AND PROSPER™

Aqueous is a registered trademark of Affiliated Distributors and distributed exclusively by its member companies.

Homewerks Worldwide, LLC
Wheeling, IL 60090
www.homewerksww.com

To see our full line of Aqueous products visit us at:
www.homewerksww.com/brands/aqueous